REV.	LOCAS.	DESCRIPTION	DATE	DRAWN
01	NEW	INITIAL RELEASE.	2010.12.27	李 春

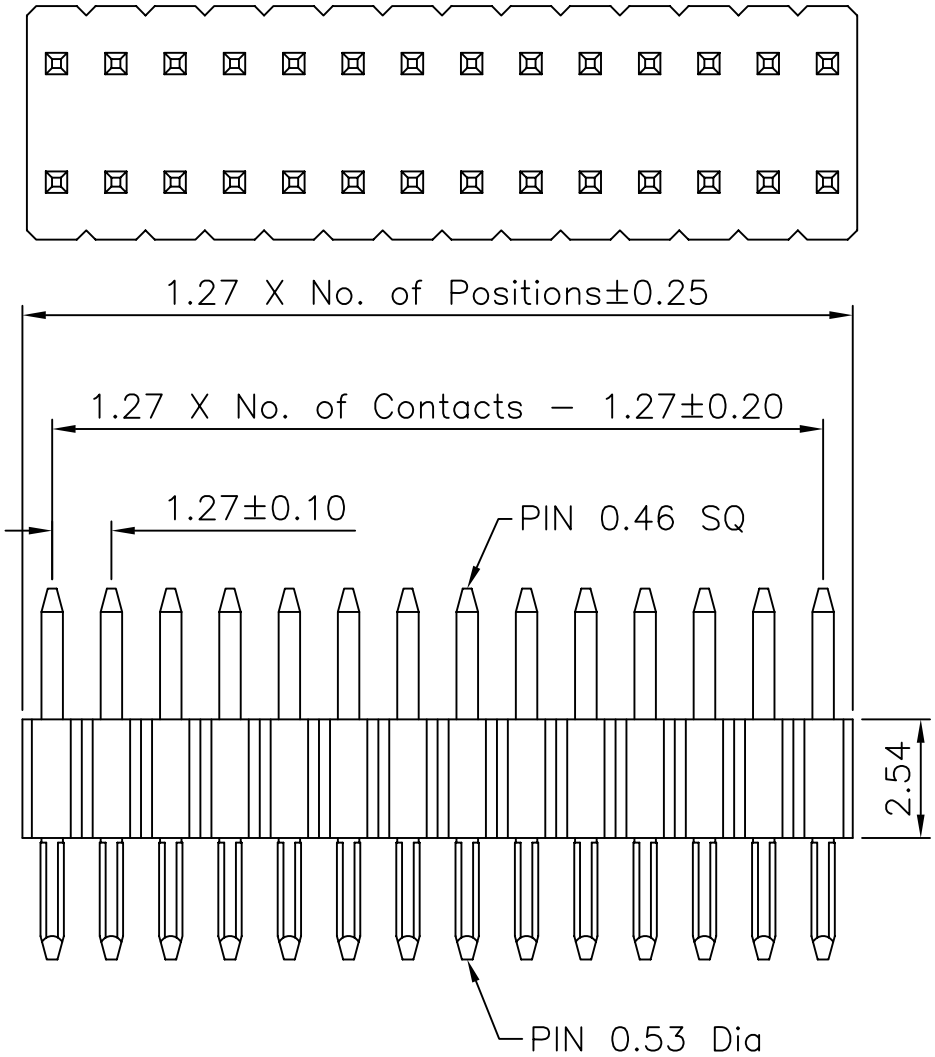

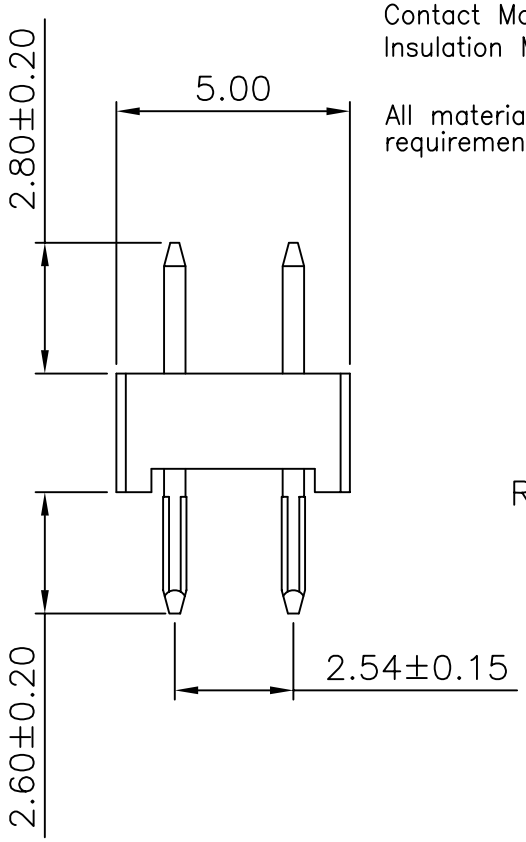

Specifications

Current Rating: 1Amp
Insulation Resistance: 1000MΩ Min.
Dielectric Withstanding: 300V AC/DC
Contact Resistance: 20mΩ Max.
Operating Temperature:−40°C to +105°C

Materials

Contact Material: Brass
Insulation Material: Polyester, UL 94V−0
LCP
All materials must meet Greenconn requirement for environment protection

Recommended P.C.Board Hole Layout

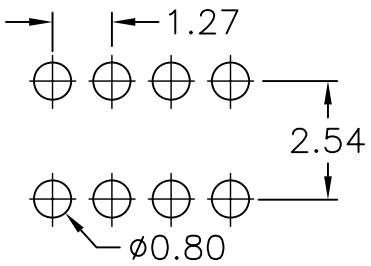

C N T 肯耐特电子有限公司

REV.	UNIT.	SCALE.	PAGE.
01	mm	1:1	1/1

GENERAL TOLERANCE	
X.°±5.0°	X.±0.30
.X°±3.0°	.X±0.25
.XX°±2.0°	.XX±0.20
.XXX°±1.0°	.XXX±0.10

DESIGN: 李 春	DATE: 2010.12.27	DWG. NO.	TITLE. 1.27 PIN HEADER DUAL ROWS SMT TYPE BASE 2.54H
CHECKED:	DATE:	PART NO. CTN−M127*254−2*XX−GS−2.8/2.6	
APPROVED:	DATE:		