REV	DESCRIPTION	DATE	ECN NO.	CHANGER
A/0	The last word	09.06.10		JACK
A/1	Modify Drawing	11.04.11	2011088	Sally

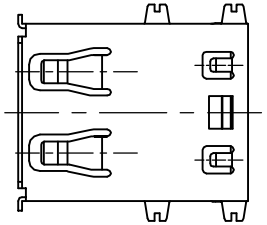

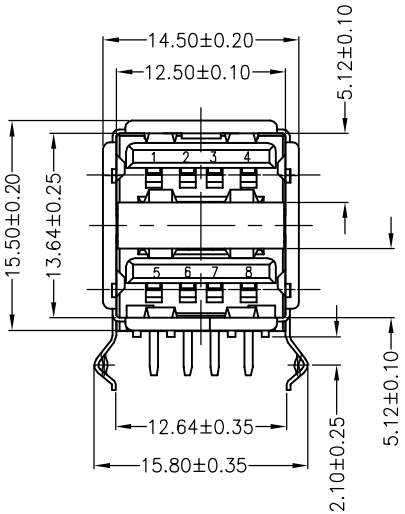

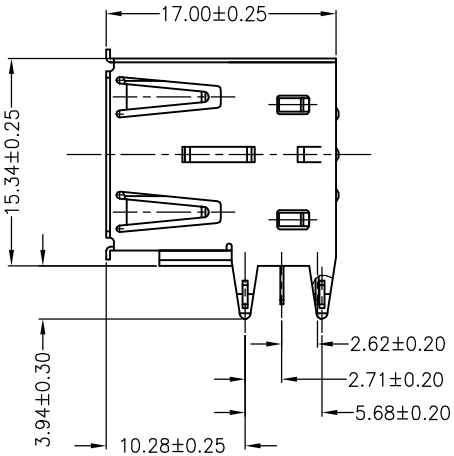

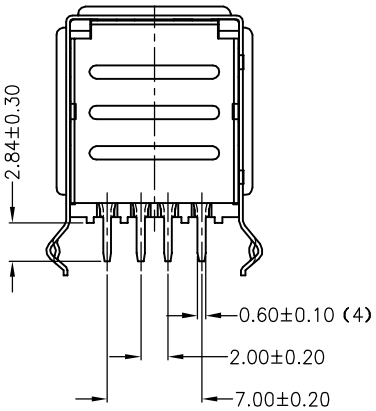

Specification
1. Current Rating:1.5AMP at 250V AC
   Voltage Rating:30V
2. Insulation Resistance:1000MΩ Min
3. Contact Resistance:30mΩ Max
4. Dielectric Withstanding Voltage:500V AC
5. Temperature Range:−20°C to +60°C
6. Mechanical Characteristics:
   Insertion Force:35 Newtons maximum
   Extraction Force:10 Newtons minimum

P/N NOTE:
USB−A2D12F−XX8X
- Shell plate spec: T=Tin plated, N=Nickel plated
- Housing colour: B=Black, N=Nature, W=White
- Contact plate spec: 0=FU", 1=3U", 2=6U", 3=15U", 4=30U"

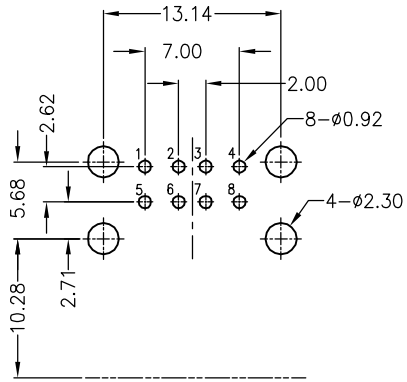

RECOMMENDED P.C.B HOLE LAYOUT
TOP VIEW(TOLERANCE:±0.10)

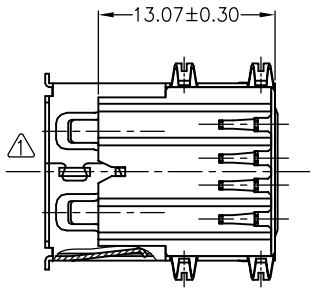

NO.	VARIETY	MATERIAL	QT,Y	REMARK
6	Shell in emi	C2680H	1	T=0.30 Plating nickel/Tin
5	Back Shell	SPCC	1	T=0.30 Plating nickel/Tin
4	Front Shell	C2680H	1	T=0.30 Plating nickel/Tin
3	Housing	P.B.T	1	UL94V-0 Nature/Black/White
2	Contact(Long)	C2680EH	4	T=0.25 Plating Gold
1	Contact(short)	C2680EH	4	T=0.25 Plating Gold

CNT 肯耐特电子有限公司

X. ±0.38	X.° ±4°	UNIT:	mm	DR:	JACK	TITLE:	USB A TYPE(FEMALE) DIP 90° Double deck (W/O Shrapnel)	
.X ±0.25	.X° ±2°	3RD:	⊕ ⊲	DE:	JACK			
.XX±0.20	.XX°							
.XXX±0.10	.XXX°	SCALE:	1:1	CHKD:		SHEET:	1/1	P/N: USB−A2D12F−XX8X
CUSTOMER DRAWING		REV:	A/1	APPD:		D/N:	1018−0012	M/N: