Pitch:2.54mm (0.1″)

Single Row Female Header S.M.T Type

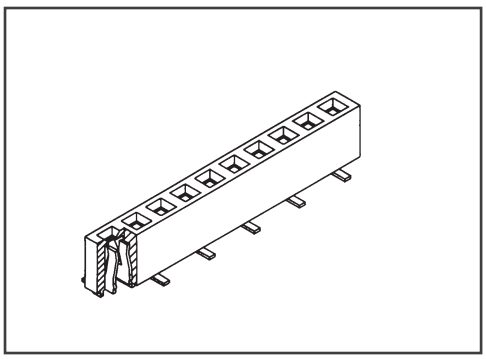

SPECIFICATIONS

Current Rating: 3 Amps
Insulator resistance:1000 Megohms Min.
Dielectric withstanding:AC 500 V
Contact Resistance:20 Megohms Max
Operating Temperature:-40° C - +105° C

MATERIALS

Contact Material:Copper Alloy
Insulator Material:30% Glass filled
P.B.T UL94V-0
Finish:Gold /Tin Plated over nickel

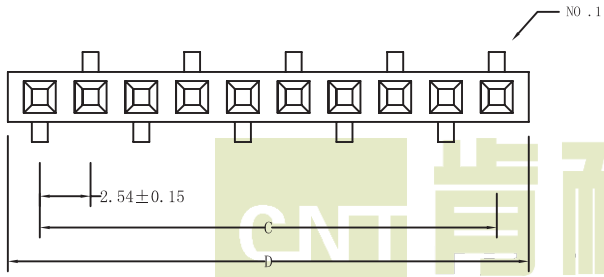

CNT 肯耐特电子
CONNECTOR ELECTRONICS

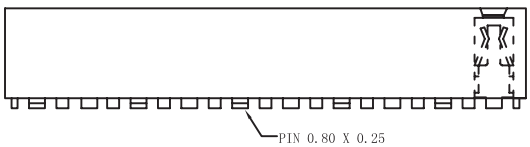

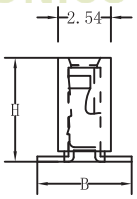

Recommended P.C.Board
Hole Layout

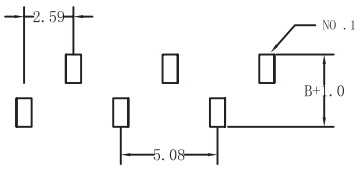

No. of Pins Per Row		02~40
Dimension		
C	2.54*No.of Contacts-2.54	±0.25
D	2.54*No.of Contacts+0.5	±0.38

Ordering Information

F	100	1	*	XX	G	M1	H/B
F: Female	Pitch: 1.00mm	1: Single Row		No.of pins per Row	G: GoldPlated T: Tin Plated	M: S.M.T Type 1	H:5.0mm 7.50mm Custom Length Available