Pitch:1.27mm (0.05″)

Single Row Female Header S.M.T Type

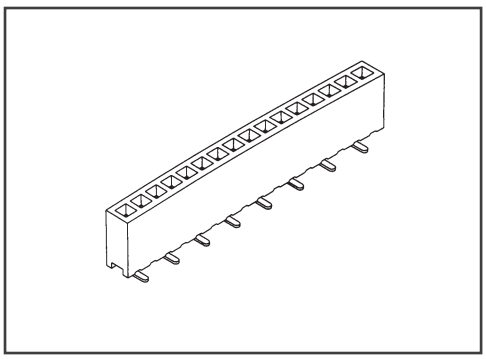

SPECIFICATIONS

Current Rating:1.0 Amps
Insulator resistance:1000 Megohms Min.
Dielectric withstanding:AC 300 V
Contact Resistance:20 Megohms Max
Operating Temperature:-40° C - +105° C

MATERIALS

Contact Material:Copper Alloy
Insulator Material:Polyester UL 94V-0
Nylon-6T
Finish:Gold/Tin Plated

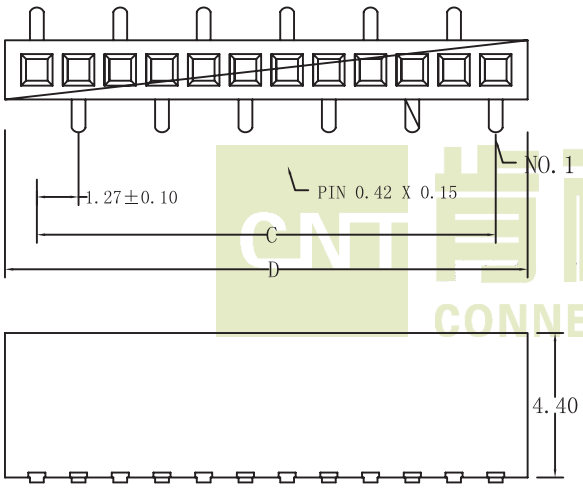

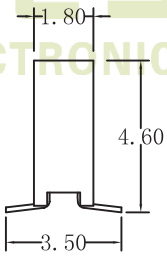

CNT 肯耐特电子
CONNECTOR ELECTRONICS

Recommended P.C.Board
Hole Layout

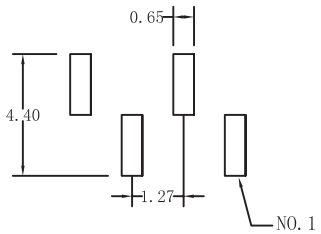

No. of Pins Per Row		02~40
Dimension		
C	1.27*No. of Contacts-1.27	±0.25
D	1.27*No. of Contacts+0.35	±0.38

Ordering Information

F	127	1	*	XX	G	M	2	440
F: Female Header	Pitch: 1.27mm	1: Single Row		No. of pins per Row	G: GoldPlated T: Tin Plated	M:SMT	Type 2	Plastic Height : 4.4mm